MV9
TOP-ENTRY
BALL VALVE

MV13
THROUGH-CONDUIT
GATE VALVE

MV11
SIDE-ENTRY
BALL VALVE

API 6A BALL AND GATE VALVES
FOR MANIFOLDS/FLOWLINES, WELLHEADS AND CHRISTMAS TREES

API 6A BALL AND GATE VALVES
MV9-MV11-MV13

ONE BRAND ∞ INFINITE TRUST

MIR VALVE is a top-tier manufacturer offering the complete range of **ball, gate and swing check valves** serving the international oil & gas, petrochemical, refining and power industry. Since 2008, we have manufactured **13,000 MIR ball and gate valves** which are today **in service** in **onshore, offshore and subsea** installations worldwide. Our technology and quality are proven in service.

We employ 150 staff worldwide; our **HQ and plant** are located in **Kuala Lumpur** (Shah Alam, Malaysia) and we have **sales offices in Miri, Jakarta, Seoul, Shanghai, Dubai** and a **Rep office** in **Milan**.

Our Quality Management System and products are certified to all standards including **ISO 9001, ISO 14001, OHSAS 18001, API 6D, API 6DSS, API 6A, API 17D, API Spec Q1, API QR, CE-PED, CE-ATEX, EN 14141, IEC 61508**. We are an approved manufacturer with most of all major oil and gas companies.

We comply and meet the most stringent customer requirements for the qualification of our products through extensive testing, such as firesafe, low temperature and cryogenic down to -196°C, high temperature up to 500°C, fugitive emission, endurance, high pressure gas, TAT and others. We perform QC inspection at our supply sources and 100% incoming inspection for all components and materials arriving to our plant.

We have extensive coverage and representation in the global markets through **our sales and rep network in over 30 locations worldwide** and growing, and are **culturally in-tune with all markets.**

Managed by a highly experienced management team, with continued investment, customer focus and continuous alignment to the dynamics driving the global markets, **MIR VALVE delivers world-class quality products.**

WE LISTEN AND LEARN FROM OUR CUSTOMERS, EMPLOYEES AND EXPERIENCE.

HQ & Plant, Shah Alam, Kuala Lumpur, 140,000 sq.ft.

INDUSTRIES AND APPLICATIONS

API 6A BALL AND GATE VALVES ARE SUITABLE FOR ONSHORE, OFFSHORE AND SUBSEA APPLICATIONS.

INDUSTRIES

- Oil & Gas
- Exploration & Production

APPLICATIONS

- Upstream
- Wellheads
- Manifolds / Flowlines
- Christmas Trees
- Subsea (API 17D)
- Isolation
- Aggressive process conditions
- Abrasive fluids
- Turrets

ONSHORE

OFFSHORE

SUBSEA

PRODUCT RANGE **MV9 - MV11 - MV13**

MV9 TOP-ENTRY BALL VALVE

PRESSURE CLASS	ONSHORE/OFFSHORE	SUBSEA (API 17D)
API 2.000 (138 barg)	1″13/16 -9″	1″13/16 -9″
API 3.000 (207 barg)	1″13/16 -9″	1″13/16 -9″
API 5.000 (345 barg)	1″13/16 -9″	1″13/16 -9″
API 10.000 (690 barg)	1″13/16 -9″	1″13/16 -9″
API 15.000 (1.035 barg)	1″13/16 - 5″1/8	1″13/16 - 5″1/8

Other sizes and pressure classes available upon request
PSL 1, 2, 3, 3G

MV11 SIDE-ENTRY BALL VALVE

PRESSURE CLASS	ONSHORE/OFFSHORE	SUBSEA (API 17D)
API 2.000 (138 barg)	1″13/16 -9″	1″13/16 -9″
API 3.000 (207 barg)	1″13/16 -9″	1″13/16 -9″
API 5.000 (345 barg)	1″13/16 -9″	1″13/16 -9″
API 10.000 (690 barg)	1″13/16 -9″	1″13/16 -9″
API 15.000 (1.035 barg)	1″13/16 - 5″1/8	1″13/16 - 5″1/8

Other sizes and pressure classes available upon request
PSL 1, 2, 3, 3G

MV13 THROUGH-CONDUIT GATE VALVE

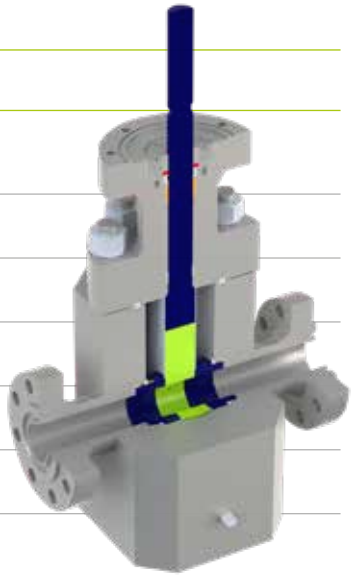

PRESSURE CLASS	ONSHORE/OFFSHORE	SUBSEA (API 17D)
API 2.000 (138 barg)	1″13/16 -9″	1″13/16 -9″
API 3.000 (207 barg)	1″13/16 -9″	1″13/16 -9″
API 5.000 (345 barg)	1″13/16 -9″	1″13/16 -9″
API 10.000 (690 barg)	1″13/16 -9″	1″13/16 -9″
API 15.000 (1.035 barg)	1″13/16 - 5″1/8	1″13/16 - 5″1/8

Other sizes and pressure classes available upon request
PSL 1, 2, 3

DESIGN FEATURES

DESIGN FEATURES	MV9 TOP-ENTRY BALL VALVE	MV11 SIDE-ENTRY BALL VALVE	MV13 THROUGH-CONDUIT GATE VALVE (FORGED)
› API 6A / ISO 10423 Design and Construction (API 17D for subsea)	STANDARD	STANDARD	STANDARD
› Face-To-Face Dimensions to API 6A (API 17D for subsea)	STANDARD	STANDARD	STANDARD
› Trunnion Mounted	STANDARD	STANDARD	N/A
› Independent Stem and Obturator (Ball/Slab)	STANDARD	STANDARD	STANDARD
› Floating Seats	STANDARD	STANDARD	STANDARD
› Soft Seat Insert	STANDARD	STANDARD	STANDARD
› Metal-to-Metal Seats	OPTIONAL	OPTIONAL	OPTIONAL
› O-Ring Type Seals	STANDARD	STANDARD	STANDARD
› Polymeric Lip-Seals	OPTIONAL	OPTIONAL	OPTIONAL
› Self-Relieving Seats (SR)	STANDARD	STANDARD	STANDARD
› Double Isolation and Bleed (DIB-1)(Double Piston Effect)(DPE Seats)	OPTIONAL	OPTIONAL	N/A
› Double Isolation and Bleed (DIB-2)(Dual Seat)(SR+DPE)	OPTIONAL	OPTIONAL	N/A
› Double Block & Bleed (DBB)	OPTIONAL	OPTIONAL	N/A
› Full or Reduced Bore	AS REQUESTED	AS REQUESTED	AS REQUESTED
› Flanged Ends / Hub Ends	AS REQUESTED	AS REQUESTED	AS REQUESTED
› Antistatic Device	STANDARD	STANDARD	N/A
› Anti Blowout Stem	STANDARD	STANDARD	N/A
› Stem Back Seat	N/A	N/A	STANDARD
› Double Body Barrier	STANDARD	STANDARD	STANDARD
› Triple Stem Barrier	STANDARD	STANDARD	STANDARD
› Vent Plug	STANDARD	STANDARD	STANDARD
› Bleed Valve	OPTIONAL	OPTIONAL	OPTIONAL
› Drain Plug	STANDARD	STANDARD	STANDARD
› Stem Injection Fitting	STANDARD	STANDARD	STANDARD
› Seat Injection Fitting	OPTIONAL	OPTIONAL	OPTIONAL
› Seat Pocket Overlay	OPTIONAL	OPTIONAL	OPTIONAL
› Seal Areas Overlay	OPTIONAL	OPTIONAL	OPTIONAL
› Wetted Parts Overlay	OPTIONAL	OPTIONAL	OPTIONAL
› Locking Device	OPTIONAL	OPTIONAL	OPTIONAL
› Lifting Lugs/Valve Support	STANDARD	STANDARD	STANDARD
› Manual or Actuated Operation	AS REQUESTED	AS REQUESTED	AS REQUESTED
› Firesafe Design	STANDARD	STANDARD	STANDARD
› Normal or Reverse Acting	N/A	N/A	AS REQUESTED
› Rising Stem Design	N/A	N/A	STANDARD
› Non Rising Stem Design	N/A	N/A	OPTIONAL
› Gate Skirt	N/A	N/A	OPTIONAL
› In-Line Maintenance	YES	NO	YES
› On-Site Maintenance	YES	YES	YES

BENEFITS OF THE TOP-ENTRY DESIGN

› **Full in-line maintenance** in vertical or horizontal position. The bolted construction allows disassembly on site for inspections and possible repairs. Clearing the bonnet off the valve allows free access to the ball and the seats, which can simultaneously be taken out.

› **Reduced number of potential leak paths.**

› After maintenance, the valve can be **fully retested without line pressure** (for DIB-1 Valves) (DPE).

› Sized to **withstand external loads from the line** even when the bonnet, the ball and the seats are removed for maintenance.

› Available for all industries and applications.

BILL OF MATERIALS

001 BODY
005 BONNET
006 BODY COVER
008 BALL
011 SEAT RING w/INSERT
012 STEM
020 SPRING HOLDER RING
021 SPACER RING
025 OPERATOR FLANGE
044 SEAT SPRING
045 ANTI STATIC DEVICE
046 DOWEL PIN
048 OPERATOR FLANGE PIN
049 BONNET PIN
050 STEM KEY
076 BACK SEAT SEAL
077 SPACER
101 STEM WASHER
102 TRUNNION WASHER
103 LOW FRICTION BEARING
201 SEAT SEAL
204 BODY SEAL
206 BODY FIRE SAFE GASKET
207 STEM SEAL
209 STEM FIRE SAFE GASKET
210 BODY COVER SEAL
212 BODY COVER FIRE SAFE GASKET
253 PISTON SEAT GREASE INJECTION SEAL
258 SPRING HOLDER RING SEAL
300 STEM KEY CAPSCREW
301 BODY STUD
302 BODY NUT
303 BODY COVER BOLT
305 OPERATOR FLANGE STUD
306 GEAR MOUNTING NUT
342 SEAT PLATE BOLT
503 STEM GREASE FITTING
504 SEAT GREASE FITTING
505 CHECK VALVE
506 SAFETY RELIEF VALVE
559 SEAT PLATE

RECOMMENDED SPARE PARTS FOR START-UP AND MAINTENANCE

076 BACK SEAT SEAL
201 SEAT SEAL
204 BODY SEAL
206 BODY FIRE SAFE GASKET
207 STEM SEAL
209 STEM FIRE SAFE GASKET
210 BODY COVER SEAL
212 BODY COVER FIRE SAFE GASKET
253 PISTON SEAT GREASE INJECTION SEAL
258 SPRING HOLDER RING SEAL

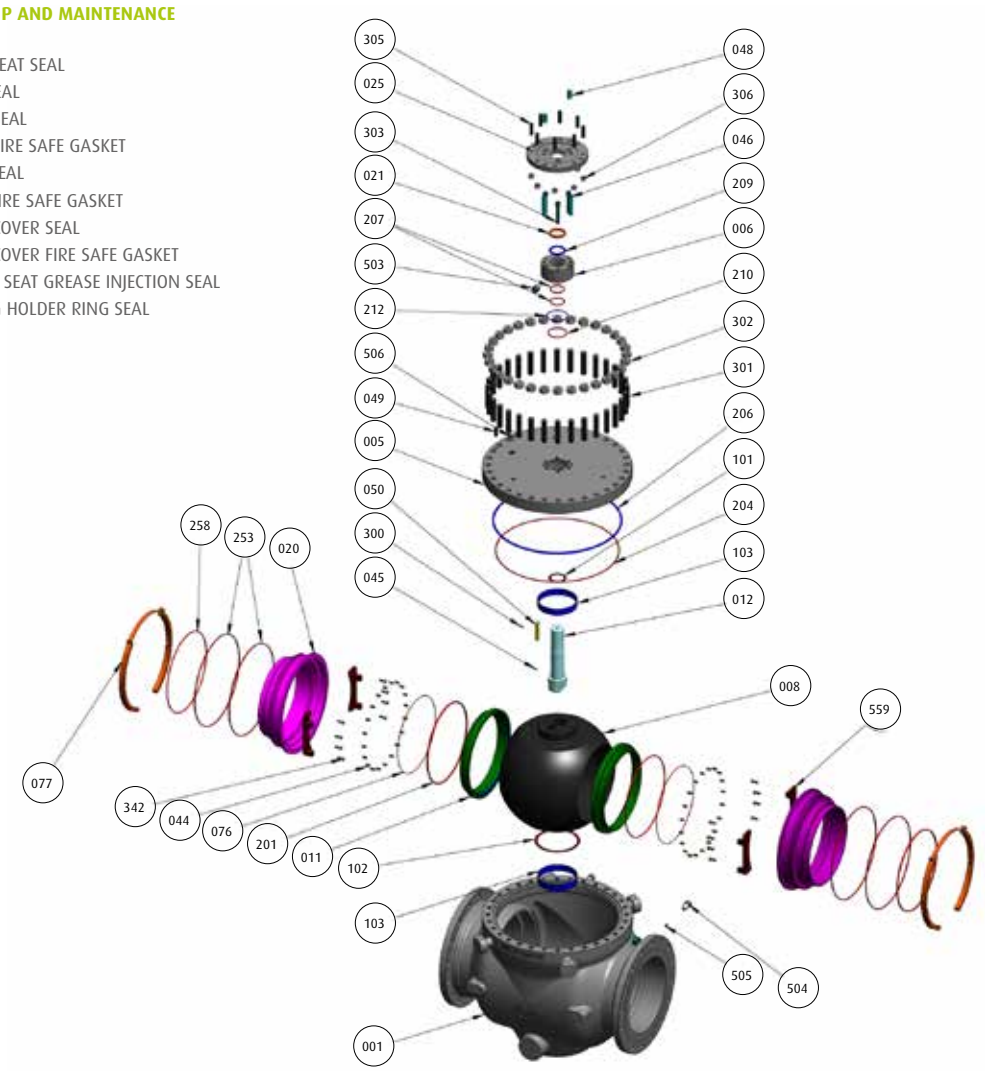

MV9 TOP-ENTRY BALL VALVE

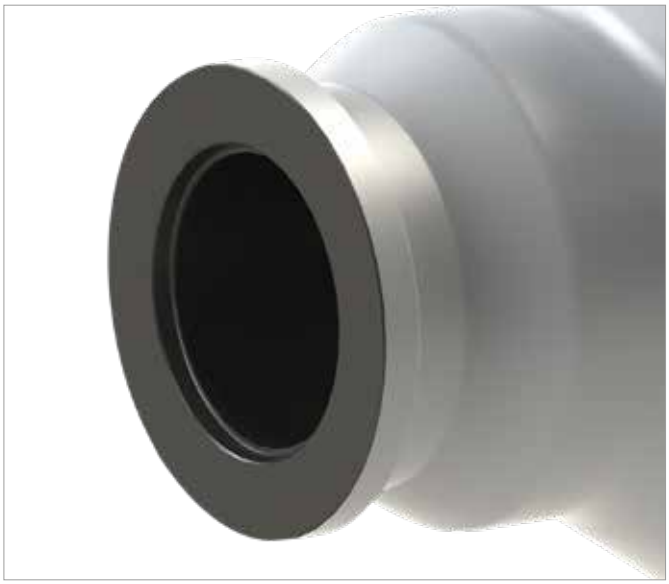

MV11 SIDE-ENTRY BALL VALVE

BENEFITS OF THE SIDE-ENTRY DESIGN

› **Most common and popular design** as it can be easily removed from the **line for maintenance** due to bolted design.

› **Most competitive design of all the ball valves in terms of cost and delivery.**

› The split body construction allows the use of forged materials in various grades of CS, SS and high alloys, thus **suitable for the most severe service conditions**.

› Available for all industries and applications.

BILL OF MATERIALS

001 BODY
004 CLOSURE
006 BODY COVER
007 TRUNNION COVER
008 BALL
011 SEAT RING w/ INSERT
012 STEM
013 TRUNNION
021 SPACER RING
025 OPERATOR FLANGE
044 SEAT SPRING
045 ANTI STATIC DEVICE
046 DOWEL PIN
048 OPERATOR FLANGE PIN
050 STEM KEY
101 STEM WASHER
103 LOW FRICTION BEARING
104 LOW FRICTION STEM BEARING
201 SEAT SEAL
204 BODY SEAL
206 BODY FIRE SAFE GASKET
207 STEM SEAL
209 STEM FIRE SAFE GASKET
210 BODY COVER SEAL
212 BODY COVER FIRE SAFE GASKET
213 TRUNNION COVER SEAL
215 TRUNNION COVER FIRE SAFE GASKET
300 STEM KEY CAPSCREW
301 BODY STUD
302 BODY NUT
303 BODY COVER BOLT
304 TRUNNION COVER BOLT
305 OPERATOR MOUNTING STUD
306 OPERATOR MOUNTING NUT
501 VENT PLUG
502 BLEED VALVE
503 STEM GREASE FITTING

RECOMMENDED SPARE PARTS FOR START-UP AND MAINTENANCE

201 SEAT SEAL
204 BODY SEAL
206 BODY FIRE SAFE GASKET
207 STEM SEAL
209 STEM FIRE SAFE GASKET
210 BODY COVER SEAL
212 BODY COVER FIRE SAFE GASKET
213 TRUNNION COVER SEAL
215 TRUNNION COVER FIRE SAFE GASKET

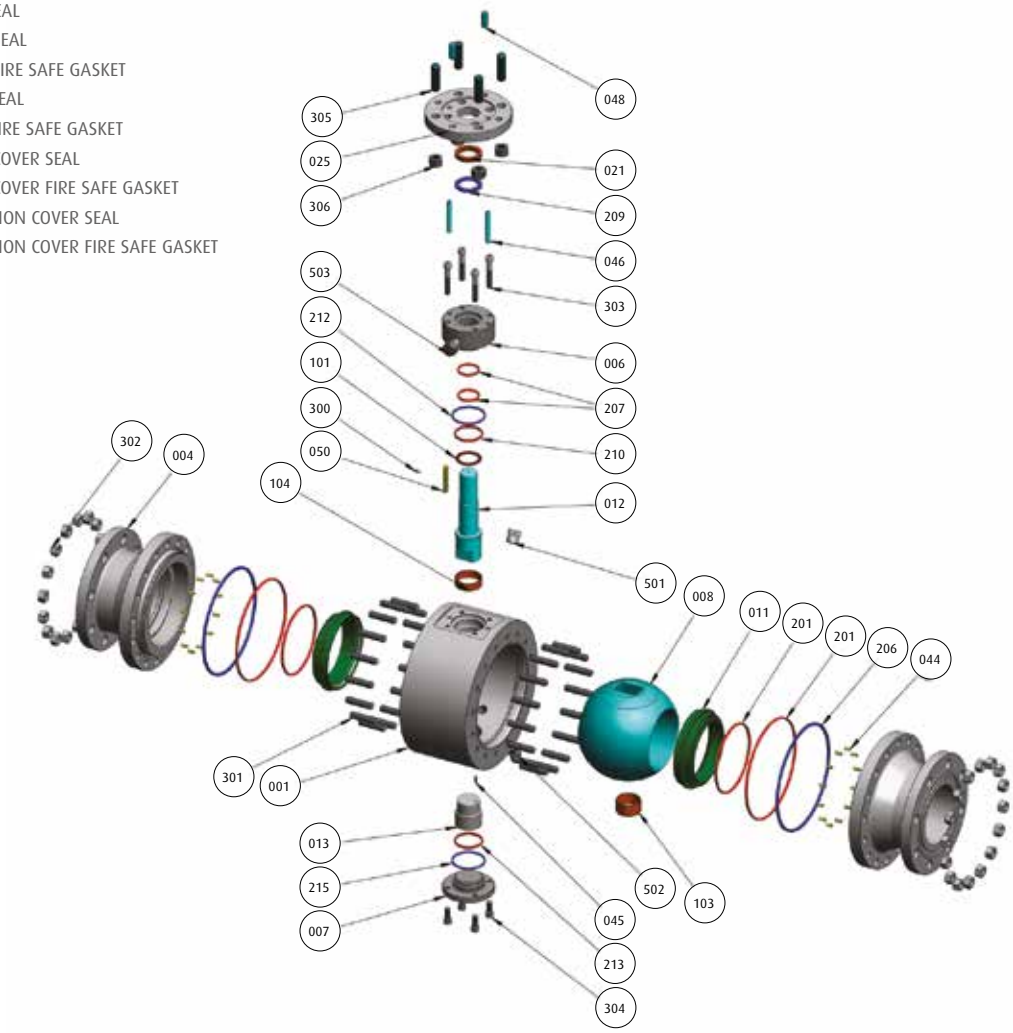

6D • API 6DSS • API 6A • API 17D • BALL VALVES • TOP–ENTRY • SIDE–ENTRY • FULLY-WELDED • THROUGH-CO
RATURE • ESDV • SIL • HIPPS • ONSHORE • OFFSHORE • SUBSEA • KUALA LUMPUR • MIRI • JAKARTA • SEOUL • DUBAI
-ENTRY • SIDE–ENTRY • FULLY-WELDED • THROUGH-CONDUIT GATE VALVES • DBB BALL VALVES • CRYOGENIC • HIG
EA • KUALA LUMPUR • MIRI • JAKARTA • SEOUL • DUBAI • MILAN • API 6D • API 6DSS • API 6A • API 17D • BALL VAL
UIT GATE VALVES • DBB BALL VALVES • CRYOGENIC • HIGH TEMPERATURE • ESDV • SIL • HIPPS • ONSHORE • OFFSHOR
N • API 6D • API 6DSS • API 6A • API 17D • BALL VALVES • TOP–ENTRY • SIDE–ENTRY • FULLY-WELDED • THROUGH-C

MV11 SIDE-ENTRY BALL VALVE

MV13 THROUGH-CONDUIT GATE VALVE

BENEFITS OF THE THROUGH-CONDUIT GATE VALVE DESIGN

› **Full in-line maintenance** in vertical or horizontal position. The bolted construction allows disassembly on site for inspections and possible repairs. Clearing the bonnet off the valve allows free access to the slab and the seats, which can simultaneously be taken out.

› **Reduced number of potential leak paths.**

› Sized to **withstand external loads from the line** even when the bonnet, the slab and the seats are removed for maintenance.

› Available for all industries and applications.

BILL OF MATERIALS

1	BODY
001A	FLANGED BODY PIPE
8	GATE
11	SOFT SEAT
12	STEM
22	LATERN
23	PACKING FLANGE
25	OPERATOR FLANGE
32	YOKE (ENTENSION)
44	SPRING
65	SKIRT
104	STEM BEARING
201	SEAT SEAL
204	BODY SEAL
209	STEM FIRE SAFE GASKET
210	BONNET SEAL
238	PACKING
301	BODY STUD
302	BODY NUT
305	OPERATOR MOUNTING STUD
310	STUD
331	YOKE STUD
332	YOKE NUT
531	EXTENSION VENT
561	SPINDLE

RECOMMENDED SPARE PARTS FOR START-UP AND MAINTENANCE

104	STEM BEARING
201	SEAT SEAL
204	BODY SEAL
209	STEM FIRE SAFE GASKET
210	BONNET SEAL
238	PACKING

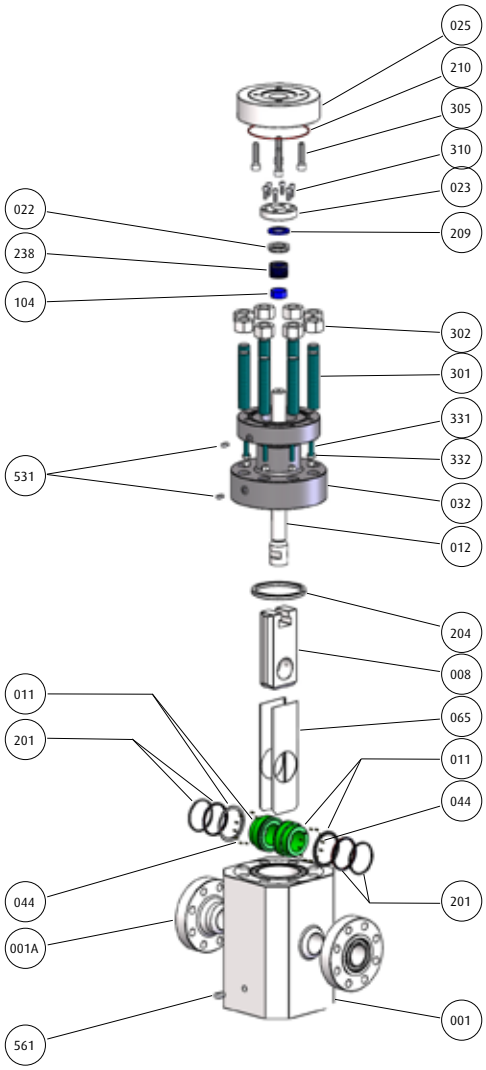

MV13 THROUGH-CONDUIT GATE VALVE

API 6A BALL AND GATE VALVES

MV9-MV11-MV13

SUBSEA VALVES TO API 17D

KEY DESIGN CHANGES FROM TOPSIDE TO SUBSEA

- Additional environmental sealing at body to closure / bonnet and body to stem
- CRA overlay on sealing or process wetted areas
- ROV interface to API 17H/ISO 13628-8 (optional)
- More stringent requirements for material selection
- Advanced inspection and testing requirements (i.e. hyperbaric testing, cycling)

TESTING CAPABILITY TO API 6A / API 17D

AS PER DESIGN STANDARDS AND CUSTOMER REQUIREMENTS

STANDARD TESTS

- Hydrostatic Body and Back Seat Test (PSL 1, PSL 2)
- Hydrostatic Seat Test (PSL 1, PSL 2)
- Extended Hydrostatic Body Test (PSL 3, PSL 3G)
- Extended Hydrostatic Seat Test (PSL 3, PSL 3G)
- High Pressure Gas Body Test (PSL 3G)
- High Pressure Gas Seat Test (PSL 3G)
- High Pressure Gas Back Seat Test (PSL 3G)
- Drift Tool Test (PSL 1, PSL 2, PSL 3, PSL 3G)

PSL Class as per customer requirements

SPECIAL TESTS (UPON REQUEST)

- Torque Test
- Endurance Test (cycling)
- Firesafe Test
- Hyperbaric Test
- Other tests, as per customer requirements
- PR2 (API 6A)
- Validation (API 17D)

CERTIFICATION

- API 6A for Ball and Gate Valves
- API 17D for Subsea Ball and Gate Valves
- API Q1

ALL STANDARD AND SPECIAL TESTS ARE PERFORMED IN HOUSE
(Except for hyperbaric test which is subcontracted nearby our plant)

DESIGN SPECIFICATIONS

DESIGN STANDARDS

DESIGN	BODY THICKNESS	BOLTING	FACE-TO-FACE DIMENSIONS	DRIVE TRAIN SIZING (MAST)	FIRESAFE
API 6A /ISO 10423 API 17D/ISO 13628-4 Customer Specifications	ASME VIII-1, VIII-2 API 6A /ISO 10423 API 17D/ISO 13628-4	ASME VIII-1, VIII-2 API 6A /ISO 10423 API 17D/ISO 13628-4	API 6A /ISO 10423 API 17D/ISO 13628-4	ASME VIII-1, VIII-2 API 6A /ISO 10423 API 17D/ISO 13628-4	ISO 10497/API 607 API 6FA BS 6755
OTHERS	Materials: ASME II-D, API 6A/ISO 10423 Flanges: API 6A/ISO 10423	NDT: ASME V Welding: ASME IX	Sour service: NACE MR-0175/ISO 15156		

MATERIAL SPECIFICATIONS

BODY	BALL/SLAB/SEATS	STEM	SEATING	SEALS	BOLTING
CARBON STEEL › A216 WCB › A352 LCC › A350 LF2 › A350 LF3 › A694 F60 › A694 F65 **STAINLESS STEEL** › 13Cr › 13Cr4Ni › 17-4PH › Nitronic **DUPLEX SS** **SUPERDUPLEX SS** **NICKEL ALLOYS** › Inconel **OTHERS**	**CARBON STEEL** › A350 LF2 › A350 LF3 › A694 F60 › A694 F65 **STAINLESS STEEL** › 13Cr › 13Cr4Ni › 17-4PH › Nitronic **DUPLEX SS** **SUPERDUPLEX SS** **NICKEL ALLOYS** › Inconel › Incoloy **OTHERS**	**CARBON STEEL** › AISI 4140 › A350 LF3 › A694 F60 › A694 F65 **STAINLESS STEEL** › 13Cr › 13Cr4Ni › 17-4PH › Nitronic **DUPLEX SS** **SUPERDUPLEX SS** **NICKEL ALLOYS** › Inconel **OTHERS**	**SOFT SEATING** › NYLON › PEEK › PCTFE **METAL SEATING** › TCC › ENP › Ni-SiC	› RPTFE › FKM › HNBR › FFKM › Graphite	**CARBON STEEL** › A193 B7 / A194 2H › A320 L7 / A194 7 › A193 B7M / A194 2HM › A320 L7M / A194 7M › A320 L43 / A194 7M **STAINLESS STEEL** › A193 B8 Cl 2 / A194 8 › A320 B8M / 8M › A453 660 **SUPERDUPLEX SS** **NICKEL ALLOYS** › Inconel **OTHERS**

Forged or cast body as per PSL and customer specifications.

COATING

ENP	Electroless Nickel Plating (25µ, 75µ)
TCC	Tungsten Carbide Coating (150µ, 200µ, 400µ)
CCC	Chromium Carbide Coating (150µ, 200µ)
Weld Overlay	AISI 316 / 316L, ALLOY 625
Stellite	Gr. 6, Gr. 12
Ni-SiC	Nickel-Silicon Carbide Plating (25µ, 50µ)

SEALING

O-Rings	Lip-Seals
-46°C /+200°C	-196°C /+220°C

Estimate temperatures as per the recommendation of the seal manufacturer.
Seal selection is based on a combination of criteria and is not limited to temperature only.

MV14 DBB BALL VALVE

BENEFITS OF THE DBB DESIGN

- Space and weight saving
- Flanged or flangeless design
- Cost saving (product and installation)
- Reduced number of potential leak paths
- Increased line structural integrity
- More reliable system
- Manual and/or actuated configuration
- Available for all industries and applications

MV14 TWIN BALL VALVE (DBB)

SERVICE	API 2000	API 3000	API 5000	API 10000	API 15000
Onshore / Offshore	1"13/16 -9"	1"13/16 -9"	1"13/16 -9"	1"13/16 -9"	1"13/16 -5"1/8
Subsea	1"13/16 -9"	1"13/16 -9"	1"13/16 -9"	1"13/16 -9"	1"13/16 -5"1/8

Other sizes and pressure classes available upon request.

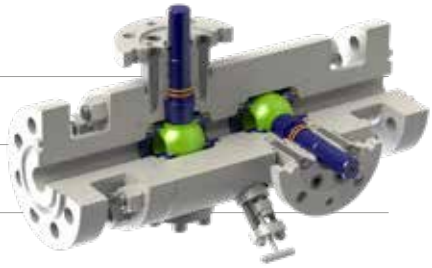

DESIGN FEATURES

› Trunnion Mounted	STANDARD	› Double Body Barrier	STANDARD
› Independent Stem and Ball	STANDARD	› Triple Stem Barrier	STANDARD
› Floating Seats	STANDARD	› Vent Plug	STANDARD
› Soft Seat Insert	STANDARD	› Needle Valve	STANDARD
› Metal-To-Metal Seats	OPTIONAL	› Stem Injection Fitting	N/A
› O-Ring Type Seals	STANDARD	› Seat Injection Fitting	OPTIONAL
› Polymeric Lip-seals	OPTIONAL	› Seat Pocket Overlay	OPTIONAL
› Self-Relieving Seats	STANDARD	› Seal Areas Overlay	OPTIONAL
› Double Block & Bleed (DBB)	STANDARD	› Wetted Parts Overlay	OPTIONAL
› Full Bore	AS REQUESTED	› Locking Device	STANDARD
› Reduced Bore	STANDARD	› Lifting Lugs/Valve Support	STANDARD
› Flanged Ends / Hub Ends	AS REQUESTED	› Manual or Actuated Operation	AS REQUESTED
› Antistatic Device	STANDARD	› Firesafe Design	STANDARD
› Anti Blowout Stem	STANDARD		

STRESS ANALYSIS USING FINITE ELEMENT (FEA)

MIR VALVE uses ANSYS software for the modeling for final element analysis (FEA) of our product, simulation, and the interaction between the pressure controlling components.

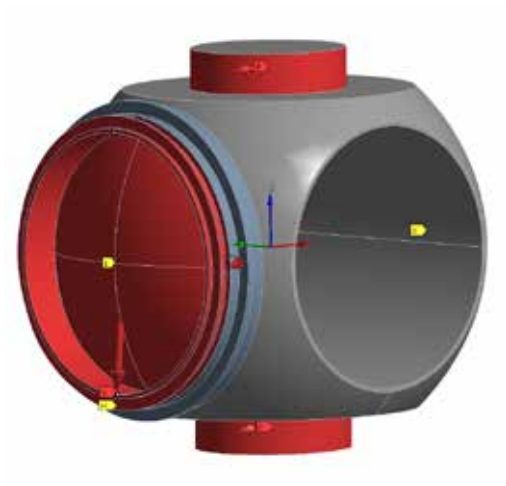

FEA on ball/seat

FEA on ball/seat

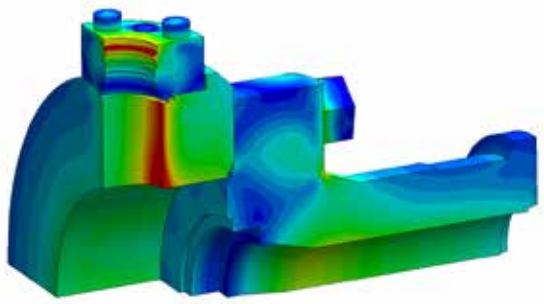

FEA on body/closure

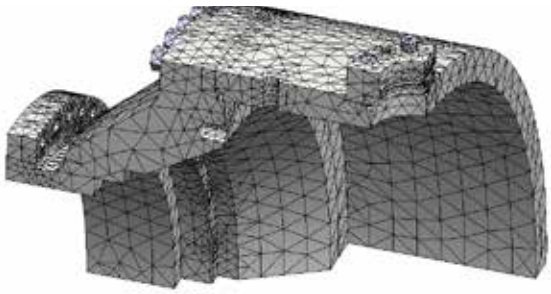

FEA on body /closure

Find your local MIR Sales Representative at www.mirvalve.com

PUBLISHED IN 2018

Doc. No. MIR-CAT-6A Rev. 9 - July 2018

All data in this catalogue is provided specifically as users' information only. Due to the continuous development of our product range, we reserve the right to update, add, change, delete and /or alter the contents, in part or in whole, at our discretion. This document is uncontrolled. Property of MIR VALVE. Published by MIR VALVE. Copyright © 2018.

MIR VALVE SDN. BHD.
Kuala Lumpur HQ & Plant

Lot 3-4, Jalan Tanjung Keramat 26/35,
Seksyen 26,40400 Shah Alam,
Selangor D.E.
Malaysia

Tel: +603 5102 5000
Fax: +603 5102 5100
Email: info@mirvalve.com

www.mirvalve.com

EAST MALAYSIA
Miri Sales Office
sales-miri@mirvalve.com
T: +6085 421801

INDONESIA
Jakarta Sales Office
info-id@mirvalve.com
T: +6221 80641014

SOUTH KOREA
Seoul Sales Office
info-mirkorea@mirvalve.com
T: +82 (0)2 417 9201

CHINA
Shanghai Sales Office
info-mirchina@mirvalve.com
T: +86 21 6121 0701

MIDDLE EAST
Dubai Sales Office
info-miruae@mirvalve.com
T: +971 50 1616392

ITALY
Milan Rep Office
info-miritaly@mirvalve.com
T: +39 02 0069 4587